THERMOSEAL®

A SENNECA COMPANY

INSTALLATION & SERVICE MANUAL

Glass Display Doors

LIMITED WARRANTY

The following shall constitute the sole warranty of Thermoseal, having its principal place of business at Gloucester City, NJ, U.S.A., (hereinafter “Thermoseal”), regarding the distribution of our products (referred to herein as “Product” or “Products”).

Product Warranty. Thermoseal warrants its products against defects in workmanship and materials for a period of 15 months from the date of shipment. In addition, Thermoseal warrants its insulating glass or replacements of same against condensation between the glass panes for a period of 10 years from the date of shipment of the original product subject to this Warranty. All Quanta LED solid state lighting carries a 5 year direct replacement warranty.

Repair or Replacement. Any repair or replacement of the product after the expiration of this warranty will be charged to customer’s account if it is done by Thermoseal at customer’s request, and Thermoseal will charge its costs and expenses incurred therefore to customer in accordance with requirements to be separately provided by Thermoseal. For any product covered by this warranty , Thermoseal will pay all necessary parts and reasonable labor charges for any authorized replacement of product components FOB Gloucester City, NJ, for 15 months.

Exemptions from Warranty. Not with standing the foregoing, the obligations of Thermoseal provided here in shall not apply to any defects resulting from the following, and Thermoseal shall not honor any warranty claim if the defect, damage, or malfunction is attributable to: Any failure caused by surrounding equipment installed in conjunction with the product.

a. Any failure caused by the method of installation.
b. Any failure in observing the handling requirements, warnings, or other notices in the specifications or in similar documents.
c. Any failure in observing the handling requirements, warnings, or other notices in the specifications or in similar documents.
d. War, riots, destruction, fire, explosion, earthquake, typhoons, cyclones, hurricanes, tornadoes, volcanic action floods, tidal waves, lightning, indirect lightning strike, any land subsidence, or landslide.
e. Any vandalism or other human intervention.
f. Any connection with another manufacturer’s components, unless approved by Thermoseal.
g. Any abuse, misuse, or negligent acts.
h. Any other defect that does not fall under Thermoseal responsibility.
i. Any phenomena that cannot be prevented with the technology available for practical use at the time of this Agreement.

Minor Defects. Thermoseal does not warrant against any defects that do not affect the basic performance and operation or the structure and mechanical strength of the product, including, but not limited to, any external scratch, stain, natural mechanical wearing, corrosion, mold deterioration or discoloration.

Scope of Warranty

a. This warranty shall apply only so long as the module is owned by the first retail purchaser of products.
b. Thermoseal maximum liability under this limited warranty is limited to the price of the product sold to customer by Thermoseal.
c. Thermoseal is not responsible for any costs directly or indirectly related to installation, removal, transportation, or re-installation of the product covered under this limited warranty.

Breakage / Product Handling. THERMOSEAL ASSUMES NO RESPONSIBILITY FOR GLASS BREAKAGE. NOTE: THIS WARRANTY IS VOID IF THE PRODUCT IS DAMAGED IN HANDLING OR INSTALLATION, OF IF THE PRODUCT IS BROKEN.

Others. Except as provided herein, there is no warranty that the product shall be merchantable or fit for any particular purpose, nor is there any other warranty, express or implied, concerning the product. All of Thermoseal remedies provided hereunder for the defective product shall be limited to the warranty provided herein. Thermoseal shall not be liable for any incidental or consequential damages arising from any defects of the product. In the event that the contents of this warranty are different from any preprinted Terms of Sale, whether those of Thermoseal or of the Customer, the provisions set forth herein shall take precedence.

SERIAL PLATES

To assist our customer with technical information or ordering spare parts, frames and doors have a serial plate which informs about model number, part number, manufacture date, work number and electric ratings.

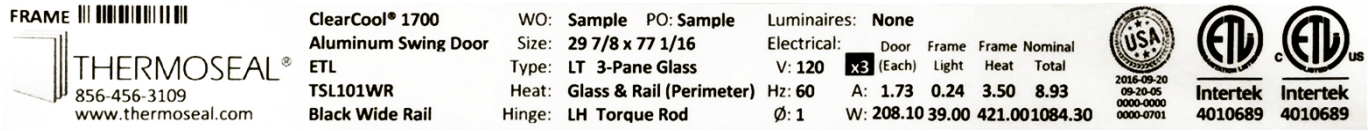

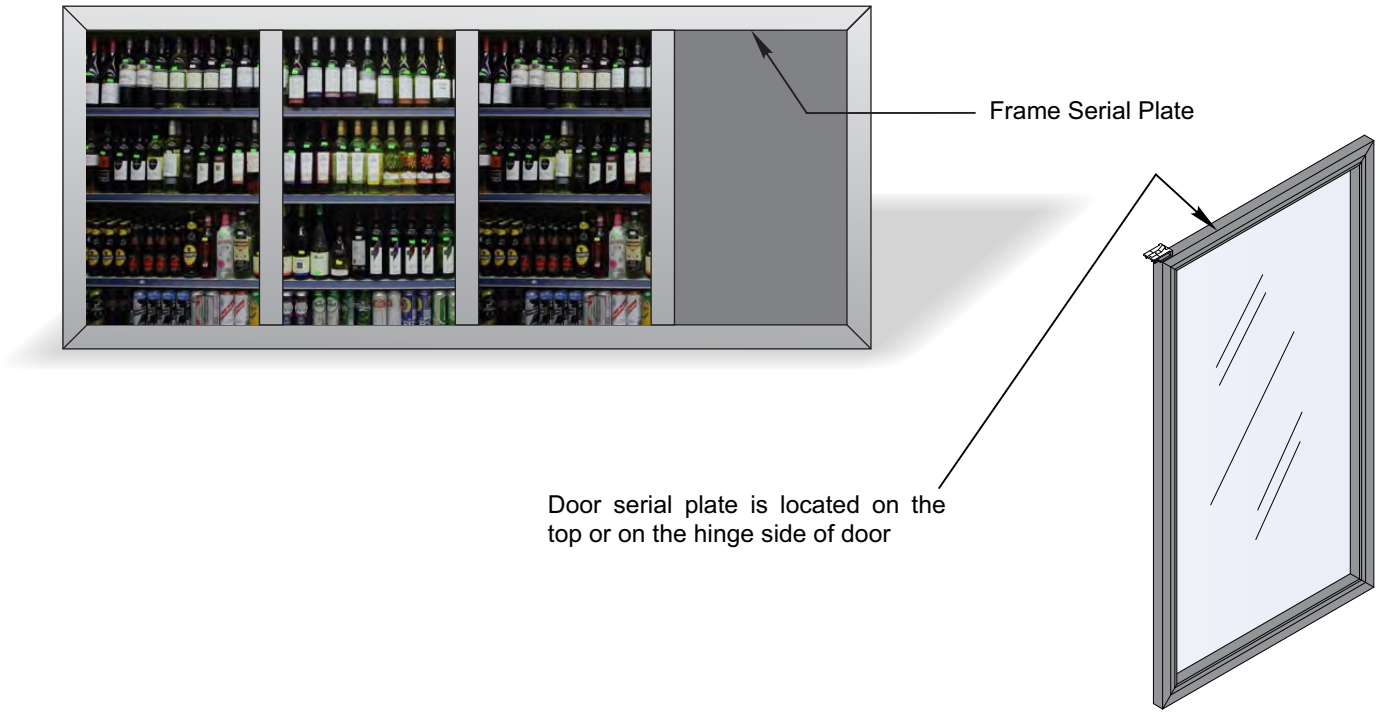

FRAME INSTALLATION

Installing the Frame Assembly into the Net Opening

Read instructions completely before installing frame.

1. The clearance between the frame sill and the bottom of the case or floor is mandated by local building codes.
2. The sill of the net opening must be a minimum of two (2) inches in height.
3. The sill must also be completely level.

Before installing the frame, confirm that the size of the net opening accommodates the finished frame. If the tolerances are too tight, the net opening will have to be enlarged.

Measure the size of the net opening and the size of the finished frame.

1. Subtract the frame height measurement from the net opening's height measurement.
2. Subtract the frame width measurement, from the net opening's width measurement.
3. Divide each number in half. This is the amount of gap that will occur between the frame and the net opening.

If there is a gap greater than 1/16" of an inch between the frame and the net-opening, then shim the gap.

SHIMMING

1. Acquire sturdy, penetrable material, such as plywood. The thickness of the material should be wedge shaped or slightly less than the gap to be filled.
2. Measure the length of the gap (height or width of frame) and cut the shim material to 1/16" of an inch less than the measure length.
3. Install the shim using the same type of mounting hardware that will be used to install the frame. Be certain that the shim installation hardware will not interfere with the frame installation hardware.
4. If necessary, cut a second shim to the same length and install it in the opposite side of the net opening.
5. If the adjacent sides of the net opening need to be shimmed, repeat the previous steps, matching the shim length of the frame sides of the net opening (less 1/16" of an inch).

FRAME INSTALLATION

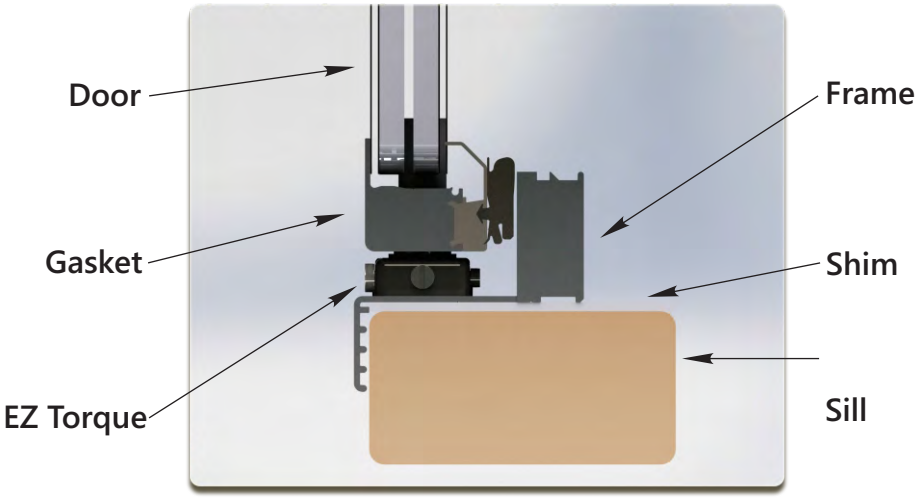

Confirm the net-opening conforms to openings listed in price book or original order.

- Insert the finished frame assembly into the net opening. If the fit is too tight, **DO NOT** force the frame.
- Insert a mounting screw into a mounting hole in each corner of the frame and tighten each screw until it is approximately a quarter inch from flush.
- Check and confirm that the frame is square.
- Using a 25 foot measuring tape, measure diagonally from one corner to the opposite corner, noting the distance.
- Measure the distance between the remaining two corners.

  Both measurements should be the same, within a 1/16" of an inch difference.
- Confirm that the frame and frame flanges are plumb to the surface of the wall around the net opening.
- Place a level on the top flange of the header frame to check header level.
- If the top of the frame (Header Frame) is sagging or bowing, correct as necessary.
- When the frame is square and plumb, tighten all mounting screws securely until each is flush to the surface of the frame.

NOTE: DO NOT over-tighten the screws, as this can cause the frame to become less square.

FRAME INSTALLATION

Check entire frame to ensure installation is correct.

Seal the gap between the frame and the surrounding wall, inside the case, cooler or freezer using a caulking gun and food grade silicone sealant.

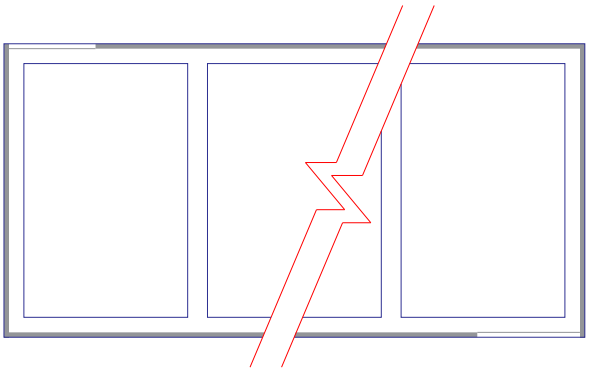

CAULKING - REAR VIEW
Seal Frame To Wall Mount From Rear

PLUMB
Vertically
Correct Mount

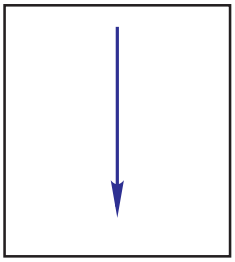

SQUARE
Measure From
Corner To Corner

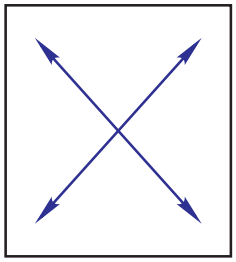

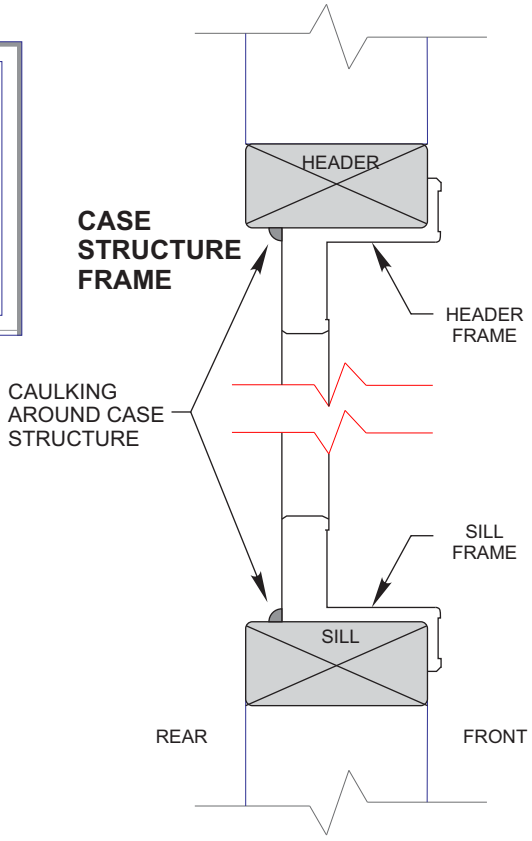

CROSS SECTION

Frame Electrical Wiring Connections

The individual wires that extend from the flexible conduit on top of the frame, provide electrical power to various frame and door functions. Refer to the wiring ID tags attached to the wire leads.

Using NEC approved wire connectors, these wires should be grouped by the Hot wires (or Circuit wires), the Neutral wires and the Ground wire for connection to either the facility or the case power.

- Black and Blue wires connect to supplied Hot (or Circuit) wire.
- White/Blue, White wires connect to supplied wire.
- Green/Yellow wire connects to the supplied ground wire.

DOOR INSTALLATION

1. Handling each door carefully, install them into the frame, one at a time by inserting the torque rod-end into the cavity of the torque adjuster.
2. Tilt the top of the door up and toward the frame, inserting the hinge pin into the GIB (Guide In Bracket), located in the top of the door frame making sure that the spring clip engages into the upper frame rail.

   Note: Make sure the clip fully engages into the frame. If the clip is not installed correctly the door could fall out.

3. Insert the hold-open bolt through the elongated hold-open slot and into the frame mounting hole. Tighten with a Phillips-head screwdriver to 55-inch pounds.
4. Adjust the door swing and door squareness by adjusting the door closer. (see Torque and Sag Adjustment)

NOTE: Do not use power tools to adjust the door closer.
NOTE: Do not over-tighten the hold-open bolt (torque to 45-55 inch pounds). Be certain that the hold-open does not bind while sliding along the hold-open bolt and adjust as necessary.

1.

2.

3.

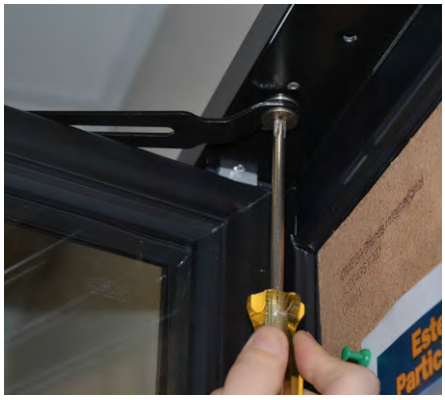

Torque and Sag Adjustment

1. The torque adjuster regulates the door squareness and tension of the door swing.
2. Use the flathead screwdriver; adjust the torque rod tension by turning the outside screw on the torque adjuster.

   - Turn counter-clockwise to increase tension.
   - Turn clock-wise to decrease the tension.

3. Adjust the door sag to square it in the frame by turning the screw that is marked SAG ADJ. (sag adjustment), on the end of the torque adjuster, until the door slowly closes itself.
4. Turn the screw clockwise to lower the handle side of the door.
5. Turn the screw counter-clockwise to raise the door's handle side.

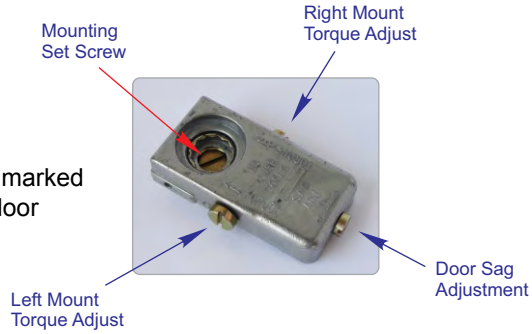

NOTE: Do not use power tools when adjusting the door closer. To check for proper door closing tension, open the door approximately 1 inch and release the door. The door should self close without any assistance.

TOP HINGE SAFETY

Explanation of Hinge Pin Engagement

During door installation, the connector body of the hinge pin assembly is inserted into the single or double GIB (Guide In Bracket) on the frame. The GIB provides the proper alignment for the electrical pins on the hinge pin assembly to engage the hinge pin receptacle. The lock spring located on top of the hinge pin assembly engaged into the upper frame rail once the hinge pin assembly has fully engaged the receptacle locking it securely in place. Once the hinge pin assembly is fully engaged the door can only be removed by inserting a pair of needle nose pliers into the square hole in the lock spring allowing the spring to be compressed, disengaging it from the upper frame rail and allowing it to be pulled free from the receptacle.

DOOR REMOVAL

1. Using a flat-head screwdriver, turn the adjustment screw on the front of the torque adjuster clockwise until the door no longer self-closes.

2. Open the door to access the hold-open device and remove the mounting bolt from the frame using a Phillips-head screwdriver.

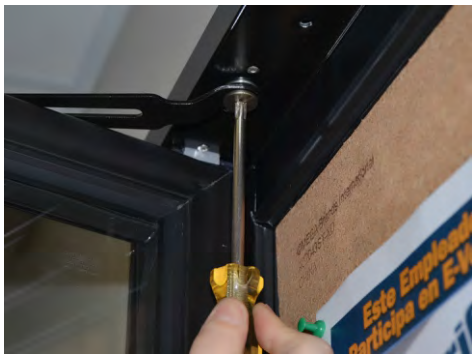

3. With the door in a nearly closed position, insert the top half of the needle-nose pliers into the grip hole in the hinge pin spring clip and the bottom half of the pliers beneath the hinge pin shroud.

4. Squeeze the pliers to pull down the spring clip, while simultaneously pulling the top of the door away from the frame and pull the top of the door out.

5. Lift and remove the door from the torque adjuster.

NOTE: Exercise caution when handling the door.

THERMOSEAL®
A SENNECA COMPANY

INSTALLATION & SERVICE MANUAL

REVERSING THE DOOR SWING

1. Using a flat-head screwdriver, loosen the torque adjuster from its mount by turning the center mounting screw counter-clockwise less than one-half (½) of a turn.
2. Remove the torque adjuster, exposing the mounting hole in the bottom frame rail.
3. Locate the mounting hole at the opposite side of the door opening.
4. Using the flat-head screwdriver, carefully pry underneath the plug cap and remove it.
5. Place the torque adjuster on the newly opened mounting hole, aligning the flanged corners of the mounting tabs.
6. Insert the torque adjuster mounting tabs onto the mounting hole with the hollow end of the torque adjuster against the door frame.
7. Confirm that the mounting flanges on the bottom of the torque adjuster align with the corner mounting slots of the mounting hole in the frame.
8. Using a flat-head screwdriver, turn the torque adjuster mounting set-screw clockwise, for ½ a turn, to tighten the mount and lock it in place. Confirm that the torque adjuster mounting is flush with the door frame.
9. Using a Phillips head screwdriver, loosen and remove the hold-open bolt from the top frame rail.
10. Relocate and install the hold-open shoulder bolts into the opposite hold-open mount of the same door frame.
11. Open the vertical side access to the hinge pin wire connections in the rail on the hinge side of the door assembly.
12. Disconnect the Hot, Neutral and Ground wires of the hinge pin from the heater wire circuit and the ground terminal.
13. Completely remove the hinge pin assembly from the top door rail.
14. Using a plastic mallet and a flat-head screwdriver, remove the torque rod from the bottom of the door assembly.
15. Swap placement of the Hinge Pin and Torque Rod to the other's original mounting hole in the door assembly hinge side rail.
16. Reinstall the hinge pin and the torque rod completely into the ends of the door assembly hinge rail.
17. If necessary, lightly tap on the torque rod with a plastic or rubber mallet until fully seated into the bottom of the door.
18. Reconnect the hinge in wires and confirm that all connections are secure.
19. Check and confirm torque rod and hinge pin are correctly and completely installed.
20. Reinstall the door into the frame.

1.


8.


12.


13.


14.


17.


REPLACING THE DOOR HEATER

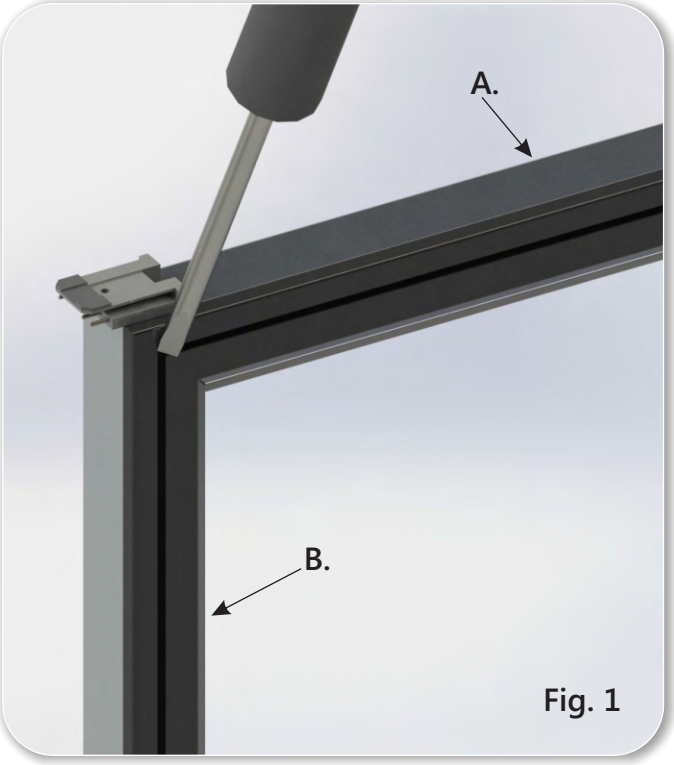

Fig. 1

Disconnect frame from power source. Remove the door. Remove the magnetic gasket (A) by starting on the upper corner and work your way down. Carefully remove plastic (B) cover with a screwdriver, starting at the upper corner (Fig. 1). If plastic cover becomes damaged it has to be replaced.

Refer to Fig. 2 for heater wire location. Remove the heater from the door rail, and cut the leads at the hinge pin power connection.

Starting at the upper hinge side corner, run the new heater around the door, pressing the heater into the aluminum channel the old one was removed from.

Connect the new heater to the hinge pin leads as shown in Fig. 3.

Carefully replace the plastic back molding. Reinstall the gasket (see gasket replacement instructions). Reinstall the door (see door installation instructions).

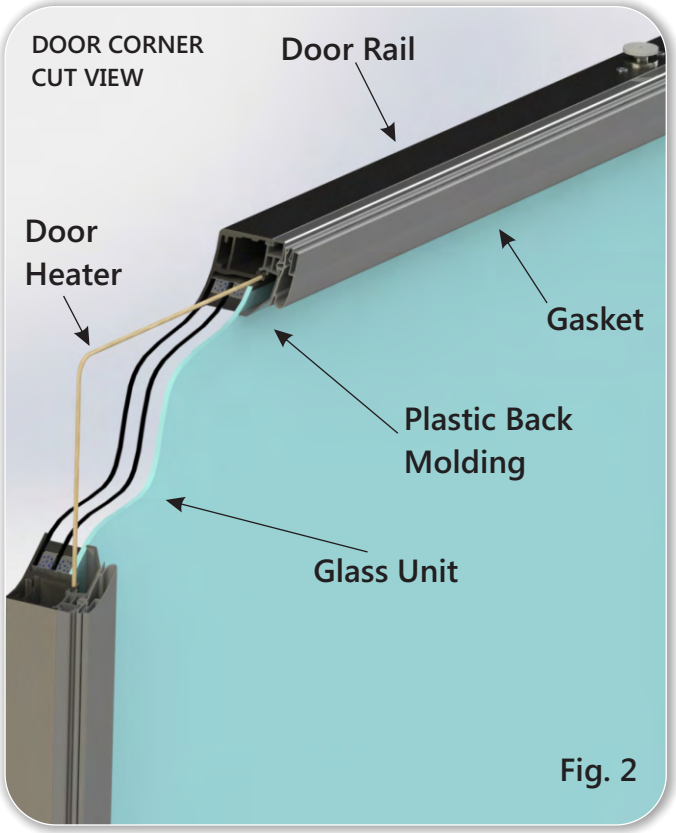

Fig. 2

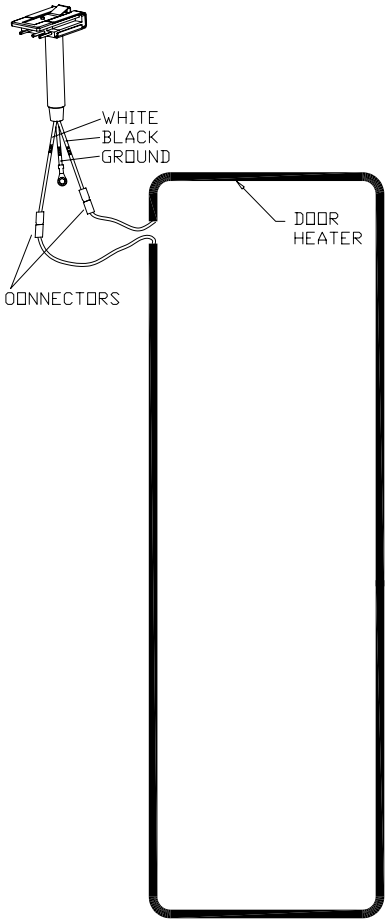

Fig. 3

REMOVING & REPLACING THE DOOR CLOSER

1. Carefully place a flathead screwdriver between the door rail and the washer beneath the torque rod. (A)
2. Dislodge the torque rod from the door by pushing on the torque rod or tap it loose using a plastic or rubber mallet. (B)
3. Once dislodged pull the torque rod completely out of the door.
4. Reinstall a new torque rod by inserting it into the same hole fully seating it with a plastic or rubber mallet. (C)

A.

B.

C.

THERMOSEAL®

A SENNECA COMPANY

INSTALLATION & SERVICE MANUAL

GASKET & HANDLE REPLACEMENT

Gasket replacement

1. Remove the magnetic gasket (A) by starting on the upper corner and work your way down (Fig. 1).

2. To install a gasket, insert the lip around the inner edge of the gasket into the groove in the plastic on the back of the door (B), then press the dart on the back of the gasket into the plastic on the back of the door (C) (Fig. 2).

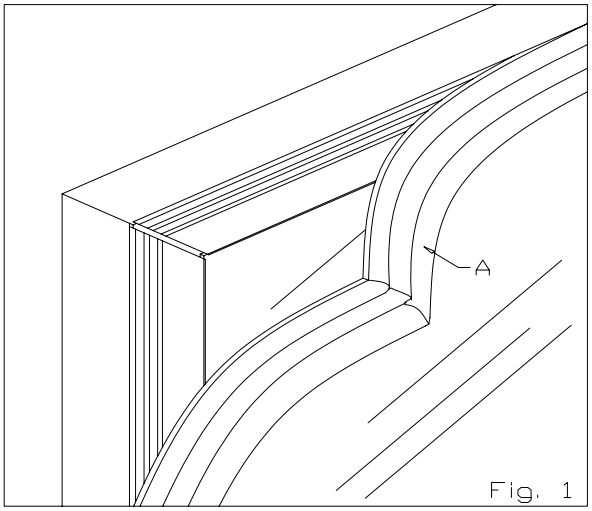

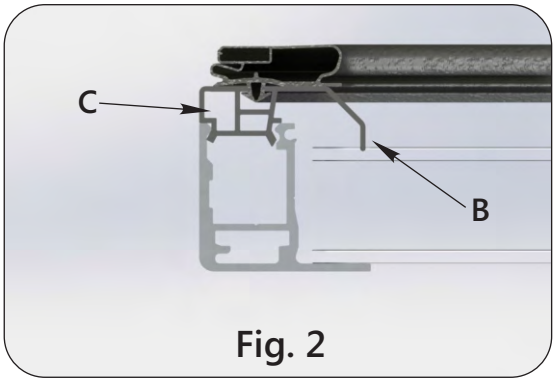

Handle replacement

1. Remove the back vinyl (X) as much as necessary to access the inner door rail (X), this will allow access to the handle mounting screws (C) (Fig. 1).

2. Reinstall the back vinyl.

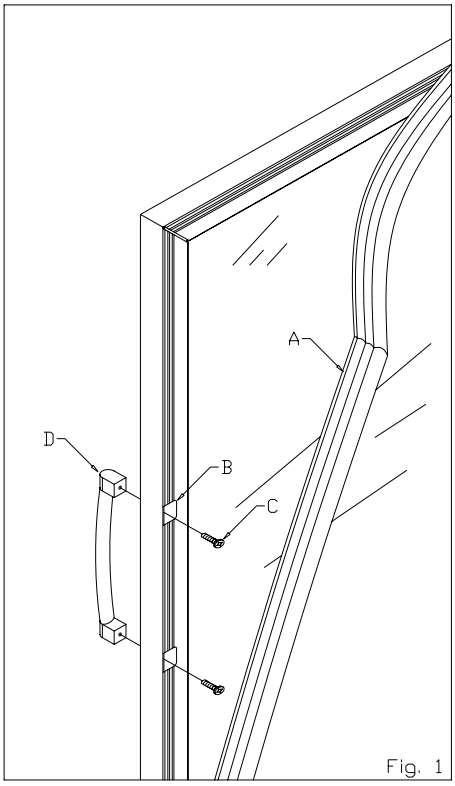

REPLACING A FRAME HEATER

Bottom, Mullion and Full Perimeter Fiberglass Heater Wire Replacement

If the heater wire requires servicing or replacement, perform the following tasks:

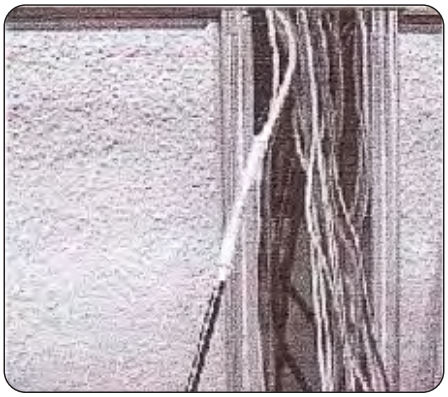

1. Remove the appropriate EZ strip(s) to gain access to the heater wire(s).
2. With the contact plate(s) removed from the frame mullion and frame rails, locate the appropriate heater wire in the frame.
3. Disconnect the heater wire assembly from the Wago connectors.
4. Carefully dislodge the heater wire from the groove mounts along the frame rails.
5. Lay the replacement wire out in a fashion that will avoid knots and tangling during re-installation into the frame.
6. Using a screwdriver handle or a putty knife, insert the entire replacement heater wire into the groove inside the frame and arrange the wire assembly to the same configuration that it had prior to disassembly.
7. Install the wire ends from the replacement heater wire in each Wago removed in step 3.
8. Replace the contact plate(s) in step 3.
9. Replace the EZ strip(s) removed in step 1.

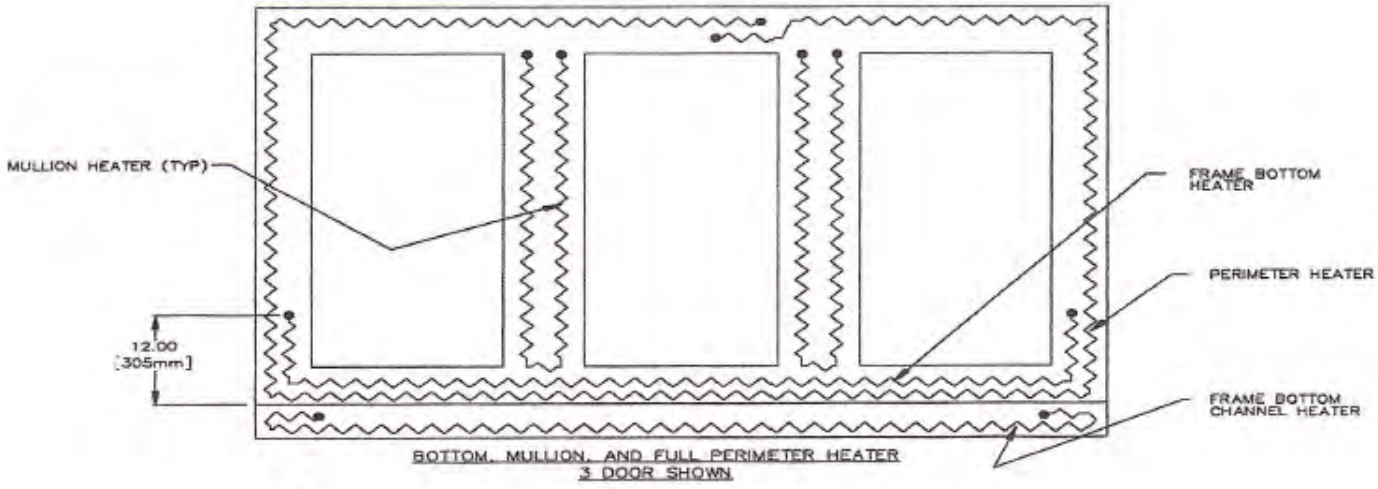

DOOR WIRING

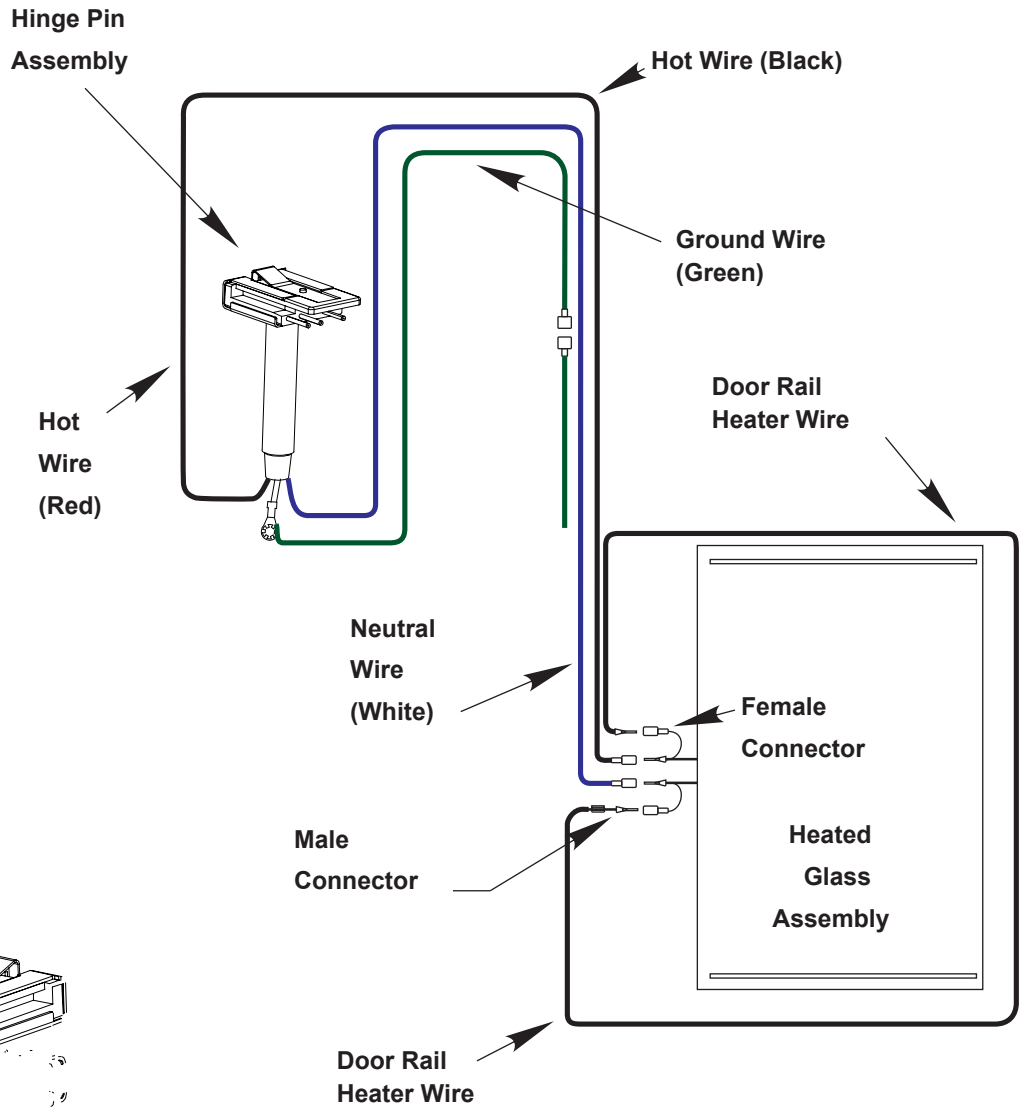

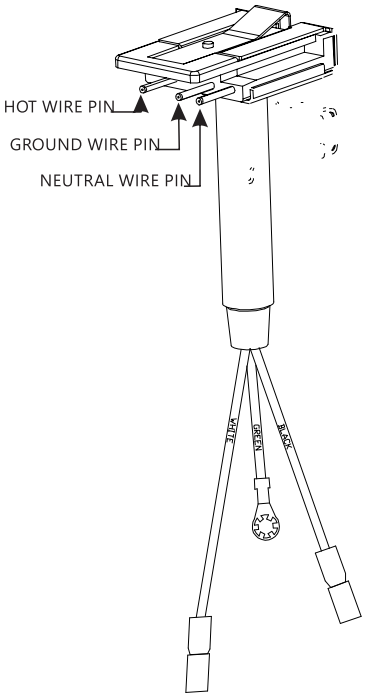

HINGE PIN ASSEMBLY
PIN CONFIGURATION

EXPLODED VIEW - DOOR

Exploded view – Quick Load Door

1) Corner Block
2) Door Rail
3) Heater Wire
4) Insulated Glass
5) Unit
6) Plastic Back Molding
7) Hinge Pin
8) Cable Bushing
9) Door Closer
10) Access Cover Cop
11) Handle
12) Hold Open Arm
13) Spacer
14) Shoulder Screw
15) Backer Plate
16) Gasket

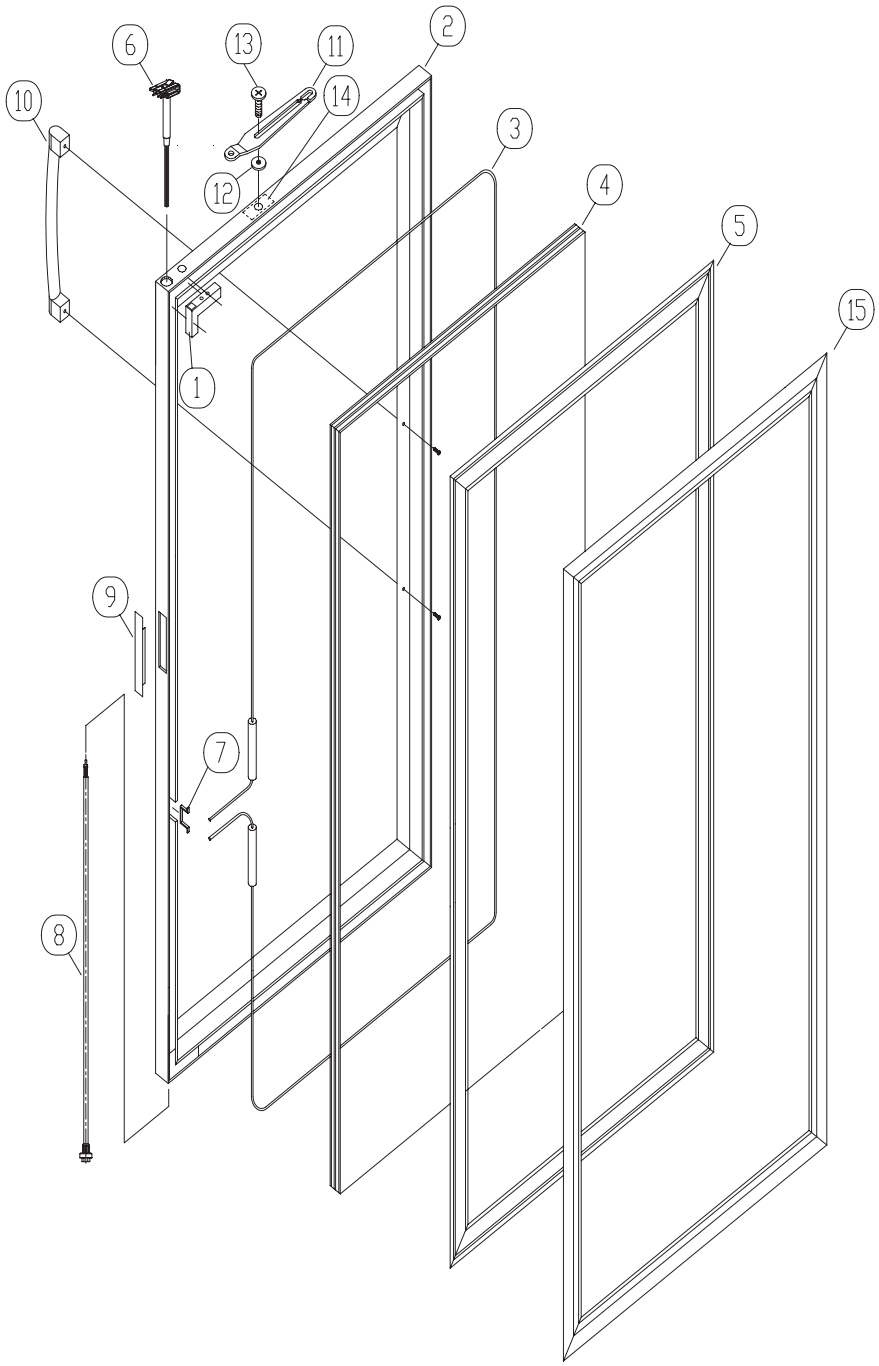

Note: For specific part numbers, provide serial plate information.

THERMOSEAL®

A SENNECA COMPANY

INSTALLATION & SERVICE MANUAL

EXPLODED VIEW - FRAME

Exploded view – Q-Tech LED

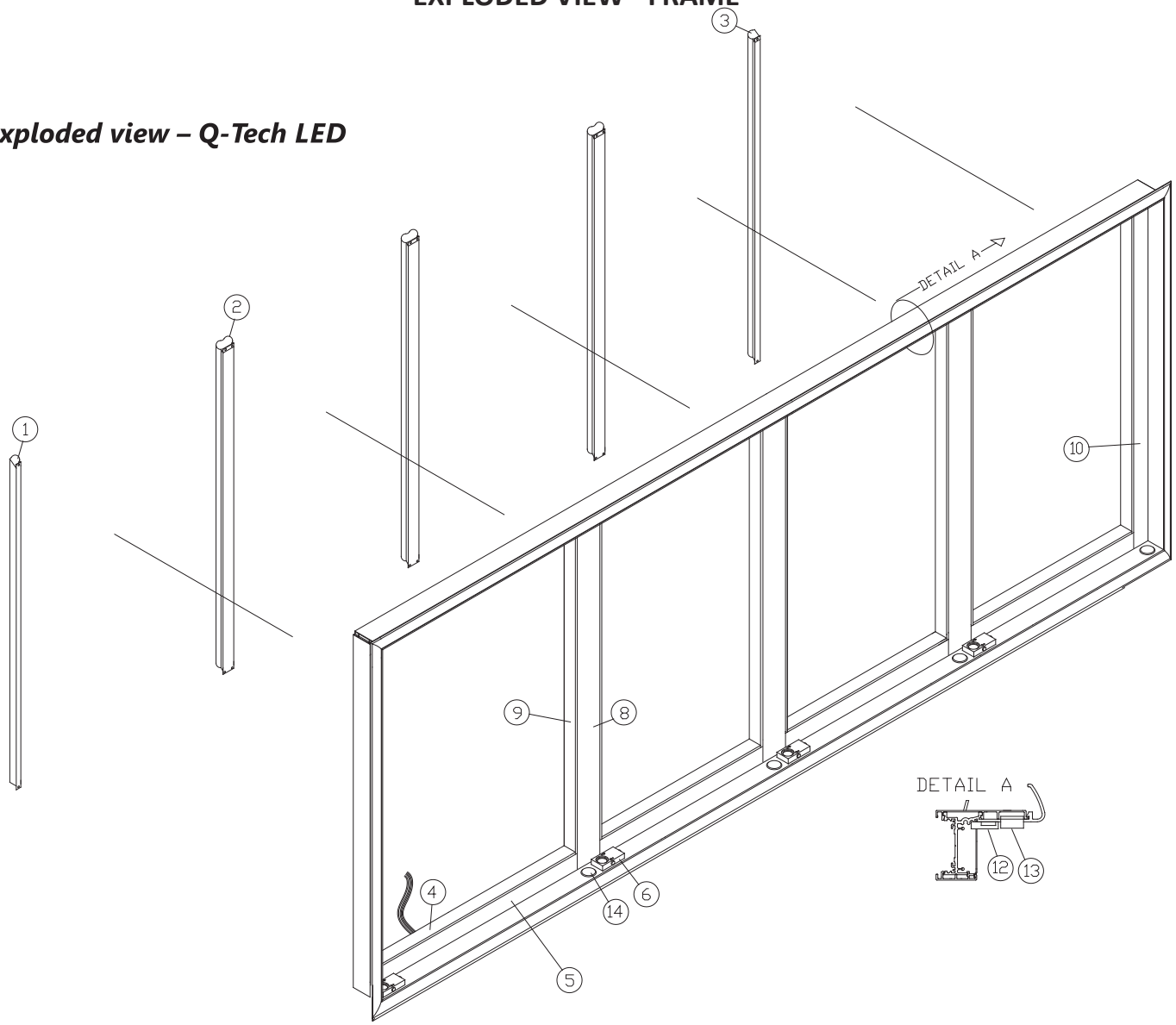

1. Left LED light fixture
2. Mullion LED light fixture
3. Right LED light bracket
4. Width vinyl
5. Width contact plate
6. Door Closer Adjuster
8. Mullion contact plate
9. Mullion vinyl
10. Vertical End Jamb contact plate
12. Receptacle
13. Gib
14. Rubber Plug

Note: For specific part numbers, provide serial plate information.

SHELVING INSTRUCTIONS

1. Thermoseal shelving is attached to the back of Thermoseal frame by quick-locking supports that are pre-assembled on these frames, as well as by holders attached to the front posts.
2. To install Thermoseal shelves, first locate a front post at one end of the Thermoseal frame. Insert the post holders into the post supports on the frame.
3. The post supports are distorted at the top of the engagement rail. After the post holders are installed, be sure to distort the bottom of the guide to prevent the guide from coming out.
4. Repeat step 3 until all of the front posts have been attached.
5. Thermoseal provides stabalizer bars to help in shelf installation. These bars are used to support posts while each opening is being erected, one opening at a time. Installing the shelves in each opening will provide strength and help in the shelf installation process.
6. After the first opening has been erected, move the stabilizer bars to the next opening to help in the assembly of posts. Repeat until the entire line-up has been complete.
7. Thermoseal shelves will engage in the slots on the back of each post. Note: The slots on Thermoseal posts face toward the tear of the cooler / freezer box.
8. Shelves and posts can be leveled by unscrewing the leveling bolt on the bottom of each post. Make sure the posts are level, both side-to-side and front-to-back.
9. Thermoseal shelves may be slanted by adjusting the rear of each shelf into a higher slot on the rear post than the front of the shelf.

THERMOSEAL®
A SENNECA COMPANY

INSTALLATION & SERVICE MANUAL

SHELVING INSTRUCTIONS

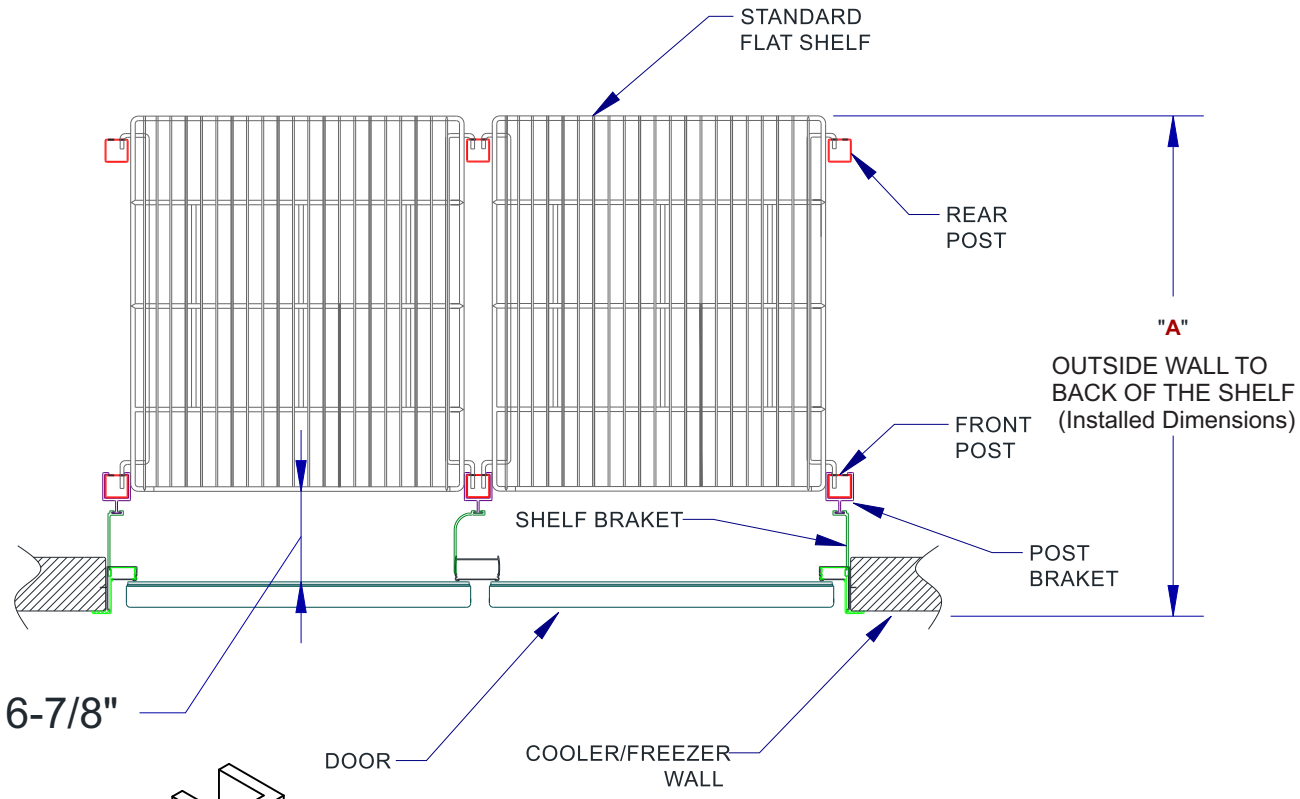

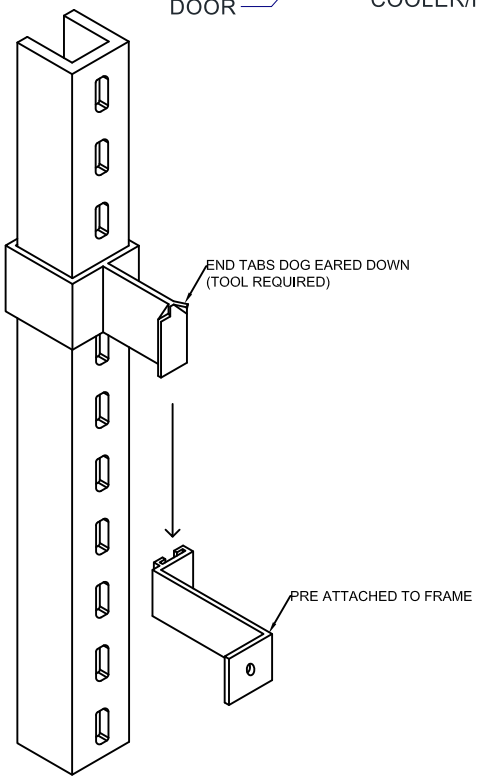

PLAN VIEW

SHELF DEPTH	"A"
24"	31-7/8"
27"	34-7/8"
36"	43-7/8"
43"	50-7/8"

CARE & CLEANING

Cleaning-Inside

The interiors of doors and frames should be cleaned at least once a year. Unplug the doors and frames before cleaning. If this is not practical, wring excess moisture out of sponge or cloth when cleaning around switches, lights, and controls.
Use a warm water and baking soda solution—about a tablespoon (15 ml) of baking soda to a quart (1 L) of water. This both cleans and neutralizes odors. Rinse thoroughly with water and wipe dry. When cleaning other parts of the doors and frames—including gaskets and all plastic parts—use the same solution. After cleaning door gaskets, apply a thin layer of petroleum jelly to the door gaskets at the hinge side. This helps to keep the gaskets from sticking and bending out of shape. Do not use cleansing powders or other abrasive cleaners.

Cleaning-Outside

The exteriors of doors and frames can be cleaned with a cloth dampened with a solution of mild liquid dishwashing detergent and water. Dry with a soft cloth.
Use a household wax, such as Pledge brand or Jubilee brand, to coat the handles. Soil will then easily wash off with dish detergent and water or a non-abrasive all-purpose cleaner. Glass can be cleaned with off-the-shelf glass cleaner.
Do not use scouring pads, powdered cleansers, bleach, or cleaners containing bleach because these products can scratch and weaken the finish.